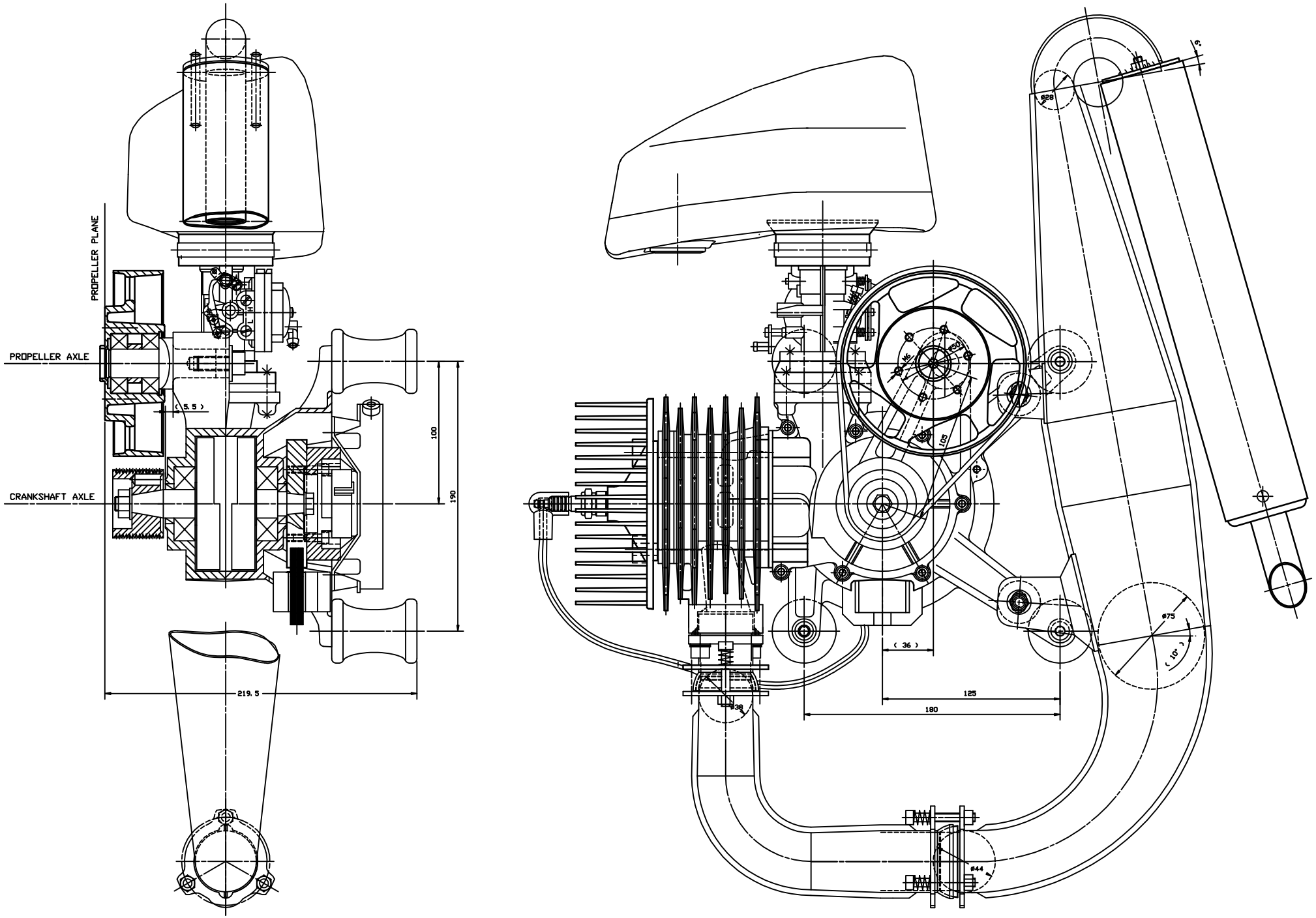
PROPELLER PLANE
PROPELLER AXLE
CRANKSHAFT AXLE
(5.5)
100
190
219.5
(36)
125
180
ø75
(10°)
ø28
ø38
ø44
105

NITRO 200